Flygt 2075.690

DEWATERING PUMP

50 Hz

Tough pumps for dewatering

The Flygt dewatering pumps from Xylem are designed for tough operating conditions. The pumps are ideal for applications in which the water or liquid contains high amounts of clay, stone chips, drilling fines etc, or to pump heavy sediment from tanks, sumps and containers.

This explosion-proof, cast iron dewatering pump is designed for heavy-duty applications in which the liquids are corrosive, abrasive or contains salt water.

Our dewatering pumps are backed by an outstanding support and world-wide presence. Operating in over 150 countries, we bring many years of experience to bear in order to keep your business moving.

FLYGT

a xylem brand

Flygt 2075.690 DEWATERING PUMP 50 Hz

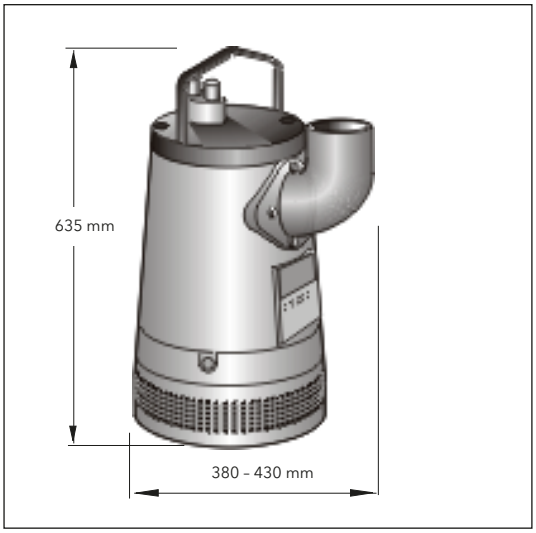

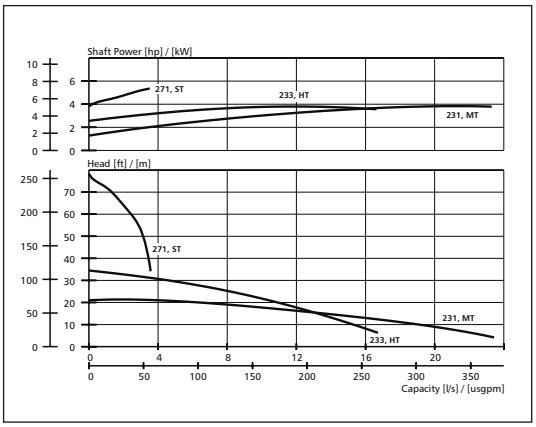

* MT, HT 3~ Voltage (V)	Rated current (A)	Starting current (A)
220	13.0	64.2
380	7.5	37.0
400	7.3	31.8
415	7.0	33.0
440	6.5	35.1
500	5.7	28.0
550	5.2	31.0
1000	2.9	14.0

** ST 3~ Voltage (V)	Rated current (A)	Starting current (A)
220	19.3	99.0
380	11.2	57.0
400	10.6	27.0
415	10.2	27.0
440	9.7	28.5
500	8.5	21.0
550	7.7	24.0
1000	4.3	11.0

Product

Submersible pump for dewatering building yards, draining water in flooded areas, and other similar applications. The pump can handle water containing relatively abrasive solids.

Denomination	
Product code	2075.690
Installation	S
Impeller characteristics	MT, HT, ST
Discharge connection	2", 3", 4"

Process data	
Liquid temperature	max +40 °C
Depth of immersion	max 20 m
The pH of the pumped liquid	pH 5.5 - 14
Liquid density	max 1100 kg/m³
Strainer hole size	8 mm x 8 mm

Motor data	
Squirrel cage 3-phase induction motor.	
Frequency	50 Hz
Insulation class	F (+155° C)
Voltage variation	
– continuously running	max ± 5%
– intermittent running	max ± 10%
Voltage imbalance between phases	max 2%
No. of starts/hour	max 15

Monitoring equipment

Thermal contacts

Cable	
Direct-on-line and Y/D start	SUBCAB®

Material	
Outer casing	Cast iron
Impeller, MT	Spring steel/stainless steel
Impeller, ST	Aluminium bronze
Wear parts lining	Nitrile rubber
Stator housing	Cast iron
Strainer	Stainless steel
Shaft	Stainless steel
O-rings	Nitrile rubber

Mechanical face seals	
Inner	Tungsten carbide/Carbon
Outer	Tungsten carbide/Tungsten carbide

Approvals

EN 50014, EN 50018, EEX de IIB T3

Weight

Total (excl. cable) 70 – 94 kg

Options	
Impeller (MT, HT)	Stainless steel
O-rings	Viton

Warm liquid version, threaded house connection, starters, strainer for heavy contaminated water, various cable sizes, various cable sizes, zinc anodes, protective ring for cable entrance cover, siemens cable monitor (L-version.690), sait cable monitor (L-version.690)

Accessories

Adapters, hose connections and other mechanical accessories.
Electrical accessories such as pump controller, control panels, starters, monitoring relays.

Rating	* MT, HT 3~	** ST 3~
Rated output	3.7 kW, 4 kW	5.2 kW
Speed of rotation	2800 rpm	2800 rpm

xylem
Let's Solve Water

www.flygt.com
www.xyleminc.com

© 2012 Xylem, Inc. All rights reserved. Flygt is a trademark of Xylem Inc. or one of its subsidiaries.

202 . Flygt 2075 . 1 . Master . 1 . 20130311